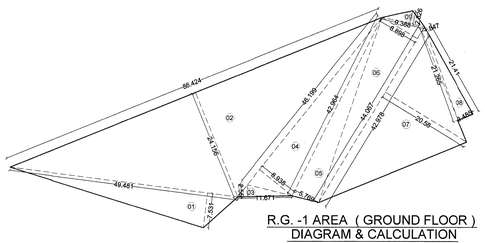

R.G. -1 AREA (GROUND FLOOR)
DIAGRAM & CALCULATION
(SCALE 1:500)

R.G. AREA CALCULATION										
R.G.-1 (GROUND FLOOR)										
Sr. No.	Triangle Number	Number of triangle	X	1/2	X	Base (m)	X	Height (m)	=	Area (Sqm)
1	1	1	X	1/2	X	49.481	X	7.531	=	186.321
2	2	1	X	1/2	X	86.424	X	24.156	=	1043.829
3	3	1	X	1/2	X	11.671	X	2.550	=	14.881
4	4	1	X	1/2	X	46.199	X	8.938	=	206.463
5	5	1	X	1/2	X	42.964	X	5.789	=	123.930
6	6	1	X	1/2	X	44.067	X	8.898	=	196.054
7	7	1	X	1/2	X	42.978	X	20.580	=	442.244
8	8	1	X	1/2	X	21.410	X	3.485	=	37.307
9	9	1		1/3		21.260		0.847		5.006
10	10	1	X	1/2	X	9.388	X	2.826	=	13.265
								TOTAL R.G.-1 AREA	=	2273.299
R.G.-2 (1ST FLOOR)										
Sr. No.	Triangle Number	Number of triangle	X	1/2	X	Base (m)	X	Height (m)	=	Area (Sqm)
1	1	1	X	1	X	71.000	X	27.000	=	1917.000
								TOTAL R.G.-2 AREA	=	1917.000
								TOTAL R.G.-1+2 AREA	=	4190.299

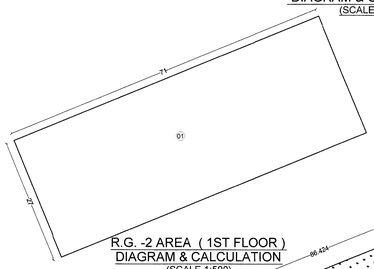

R.G. -2 AREA (1ST FLOOR)
DIAGRAM & CALCULATION
(SCALE 1:500)

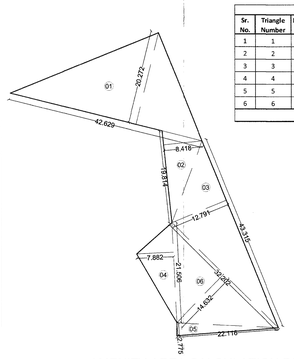

AMENITY AREA CALCULATION DIAGRAM
SCALE 1 : 500

AMENITY AREA CALCULATION										
Sr. No.	Triangle Number	Number of triangle	X	1/2	X	Base (m)	X	Height (m)	=	Area (Sqm)
1	1	1	X	1/2	X	42.629	X	20.272	=	432.088
2	2	1	X	1/2	X	19.834	X	8.418	=	83.397
3	3	1	X	1/2	X	43.315	X	12.791	=	277.021
4	4	1	X	1/2	X	21.506	X	7.882	=	84.755
5	5	1	X	1/2	X	22.116	X	2.775	=	30.686
6	6	1	X	1/2	X	32.202	X	14.632	=	235.590
								TOTAL AMENITY AREA	=	1143.537

1ST FLOOR LAYOUT
SCALE 1 : 300

A	PLOT AREA CALCULATION (AS PER TILR)									
Sr. No.	Triangle Number	Number of triangle	X	1/2	X	Base (m)	X	Height (m)	=	Area (Sqm)
1	1	1	X	1/2	X	49.481	X	7.531	=	186.321
2	2	1	X	1/2	X	86.424	X	24.156	=	1043.829
3	3	1	X	1/2	X	54.339	X	7.674	=	208.499
4	4	1	X	1/2	X	9.388	X	2.826	=	13.265
5	5	1	X	1/2	X	53.747	X	21.093	=	566.843
6	6	1	X	1/2	X	53.747	X	3.651	=	98.115
7	7	1	X	1/2	X	42.818	X	24.441	=	523.257
8	8	1	X	1/2	X	132.889	X	24.431	=	1623.306
9	9	1	X	1/2	X	132.889	X	89.616	=	5954.490
10	10	1	X	1/2	X	36.545	X	109.713	=	2004.731
11	11	1	X	1/2	X	44.515	X	109.713	=	2441.937
12	12	1	X	1/2	X	8.677	X	107.813	=	467.747
13	13	1	X	1/2	X	94.087	X	9.195	=	432.565
14	14	1	X	1/2	X	51.116	X	8.134	=	207.889
15	15	1	X	1/2	X	41.324	X	5.248	=	108.434
16	16	1	X	1/2	X	23.537	X	10.467	=	123.181
17	17	1	X	1/2	X	123.657	X	18.469	=	1141.911
18	18	1	X	1/2	X	7.882	X	21.506	=	84.755
19	19	1	X	1/2	X	7.304	X	21.506	=	78.540
20	20	1	X	1/2	X	23.050	X	19.432	=	223.954
21	21	1	X	1/2	X	23.166	X	2.775	=	32.143
22	22	1	X	1/2	X	117.936	X	18.823	=	1109.955
23	23	1	X	1/2	X	91.674	X	32.206	=	1476.226
24	24	1	X	1/2	X	32.640	X	4.618	=	75.366
25	25	1	X	1/2	X	25.464	X	7.998	=	101.831
26	26	1	X	1/2	X	53.340	X	1.961	=	52.300
27	27	1	X	1/2	X	28.188	X	81.444	=	1147.872
28	28	1	X	1/2	X	28.333	X	81.444	=	1153.776
29	29	1	X	1/2	X	57.483	X	37.174	=	1068.437
30	30	1	X	1/2	X	57.483	X	19.200	=	551.837
31	31	1	X	1/2	X	46.137	X	14.962	=	345.151
								TOTAL PLOT AREA	=	24648.460

B	D.P. ROAD AREA CALCULATION									
Sr. No.	Triangle Number	Number of triangle	X	1/2	X	Base (m)	X	Height (m)	=	Area (Sqm)
1	1	1	X	1/2	X	47.741	X	10.874	=	259.568
2	2	1	X	1/2	X	93.950	X	15.369	=	721.959
3	3	1	X	1/2	X	106.503	X	10.157	=	540.875
4	4	1	X	1/2	X	51.116	X	5.286	=	135.100
5	5	1	X	1/2	X	44.542	X	5.890	=	131.176
6	6	1	X	1/2	X	29.355	X	10.467	=	153.629
								TOTAL D.P. ROAD AREA	=	1942.307
								TOTAL PLOT AREA (BLOCK A - B)	=	22706.153

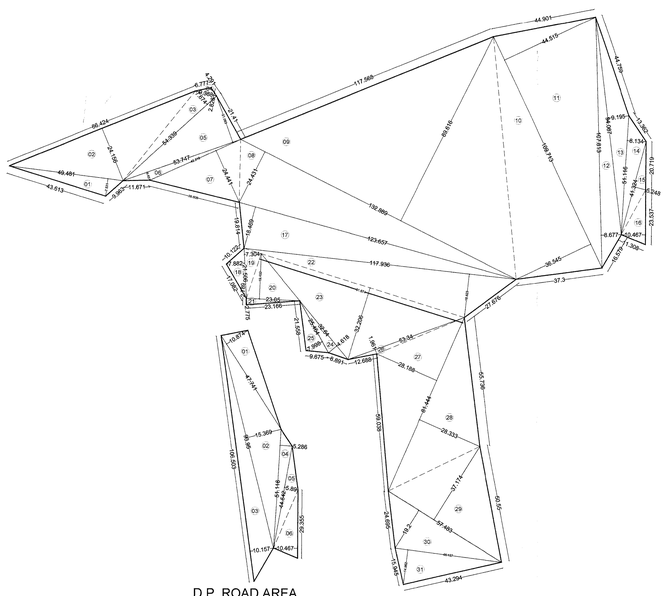

D.P. ROAD AREA
CALCULATION DIAGRAM
SCALE 1 : 1000

PLOT AREA CALCULATION DIAGRAM
SCALE 1 : 1000

STAMP OF APPROVAL | 02/13

पनवेल महानगरपालिका
नोंदणी- होय पेज नंबर —
पनवेल महानगरपालिकेच्या मु.क्र.-१-मु.क्र./सर्व्हे क्र./गट-क्र./
मु.क्र-४४/३/२, ४ ऐवजी मध्ये नियोजित/बुलगिरि/
फेरबदल-कारणे/प्रस्तावित शाळेकरिता आरक्षणाचे जतनासाठी या
कार्यालयाचे जा.क्र./नगररचना/ 95965/ जा.क्र.
26/5/2022 दिनांक 27/05/2022
नवीन व्यापारी, रहिवास अधिक राहून जतनाबाबत सातबारा रेकॉर्ड
दुरुस्त केल्याप्रमाणे संगणक.

मा. आयुक्त यांचे मंजूरी नुसार

सहायक संचालक, नगररचना
पनवेल महानगरपालिका

PANVEL MUNICIPAL CORPORATION
पनवेल महानगरपालिका
कार्यालय-पनवेल
PANVEL-RAIGAD

CONTENTS OF SHEET

1ST FLOOR PLAN

NAME OF THE OWNER & SIGNATURE

M/s. Arihant Superstructures Ltd

(NAME & SIGNATURE OF DIRECTOR)

DESCRIPTION OF PROPOSAL & PROPERTY

PROPOSED RESIDENTIAL CUM COMMERCIAL BUILDING IN THE SITE / PLOT OF LAND ON SURVEY NO. 44/3/2, 59/2, 60/1/2B, 35/1+2/1(2) , 35/1+2/1(3) , 35/9+2/1(4) VILLAGE - GHOT, TAL. - PANVEL, DIST. - RAIGAD.

ARCHITECT NAME & SIGN

NEHA JAIN
REG NO : CA/2008/43603

DATE	DRAWN. BY	CHKD. BY	SCALE	NORTH
19-03-22	Jayashri		1:100	N

AN.ARCH
ARCHITECT & PLANNERS
Office no.20&21,-Raheja Arcade,
Sec-11,Plot no.61,CBD
Belapur-400614,
cntct no.022-27562410,
mail i.d-anarch.architect@gmail.com

DESIGN WITH A DIFFERENCE