CONTENTS OF SHEET

01/10

BLOCK & LOCATION PLAN, R.G. AREA CAL & DIAGRAM, PLOT AREA DIAGRAM & CALCULATION.

PROFORMA -A

S.N	Details		
1	Plot Area Gross		21,489.30
	Deduction for		
2	(a) Less Setback		
3	(b) Less Reservation (School / Play ground)		1,350.00
4	(c) Any Subdivision Approved		
5	(d) Lessee		
6	(e) Chawl Outside Mill Property		
7	(f) Area to Retain for Mill Activity & Modernization		
8	Total (a + b + c + d + e + f)		1,350.00
9	Net Plot (1 - 8)		20,139.30
10	Existing Built Up Area on net plot		21,851.55
11	Land Component of existing Built Up Area (10) above		16,429.74
12	Open Land / Balance Potential for sharing (9-11)		3,709.56
	(a) Owner 40% of (12)	40%	1,483.83
	(b) M.C.G.M. 33% of (12)	33%	1,224.16
	(c) MHADA 27% of (12)	27%	1,001.58
12A	NET PLOT FOR DEVELOPMENT		17,913.56
13	15% RG to be deducted from owners share on 12 (A) above (only for FSI purpose)		
14	Additions for FSI		
	(a) Total Land Component of existing Built Up Area at (11) above		16,429.74
	(b) TDR of MCGM Plot at 12 (A) above .		1,224.16
	(c) 40% Owner share after deduction of 15% on 12 (A) 13 above		1,483.83
	(d) Set Back at (2) above		
	Total (a +b +c +d) .		19,137.72
15	Permissible FSI		1.33
16	Total permissible built up area		25,453.16
17	Add for PPL FSI		
18	Add for Heritage TDR (as per DCR 67) 12A x 40% x 1.33		
19	Total Permissible Built Up area		25,453.16
20	Existing Structure to be retained Area (Temporary)		4,205.06
21	Proposed Built Up area		20,548.53
22	Excess Balcony area taken in FSI		
23	(a) Purely residential built up area		20,548.53
	(b) Remaining non - Residential Built up area		
24	Total Built up area proposed (20 + 21+ 22)		24,753.59
B	**Details on F.S.I. availed as per DCR 35(4)**		
1	Fungible built up area component proposed vide DCR 35(4) for purely residential = OR < (23a x 0.35)		
2	Fungible built up area component proposed vide DCR 35(4) for Non Residential = OR < (23b x 0.20		
3	Total Fungible Built up area vide DCR 35(4) = B1 + B2		
4	Total Gross built up area proposed (21 + B3)		24,753.59

PROFORMA -B

CERTIFACATE OF AREA

CERTIFIED THAT THE PLOT UNDER REFERANCE WAS SURVEYED BY ME ON ________ DIMENSIONS OF THE SIDES ETC. OF THE PLOT STATED ON THE PLAN - 21489.30 SQ.M.ARE AS MEASURED ON SITE AND THE AREA SO WORKED OUT TALLIES WITH THE AREA STATED IN DOCUMENT OF OWNERSHIP/LAND RECORDS DEPT./CITY SURVEY RECORDS.

STAMP OF DATE OF RECEIPT OF PLAN

Approved Subject to Condition Mentioned in the file No. EEBP/3429/GN/A dt. 2/11/15

Asst. Engr/Ex. Eng. Bldg. Proposal (City) IV
Municipal Corporation of Greater Mumbai.

STAMP OF DATE OF APPROVAL OF PLAN

R.G. AREA CALCULATION

R.G.	S.No.	Dimensions	=	Area	Unit
R.G. 01	ADDITION (X)				
	1	28.42 X 7.79 X 0.50 X 1	=	110.70	SQ.MT
	2	28.42 X 7.71 X 0.50 X 1	=	109.56	SQ.MT
	TOTAL		=	220.26	SQ.MT
R.G. 02	ADDITION (X)				
	1	29.92 X 7.62 X 0.50 X 1	=	114.00	SQ.MT
	2	29.92 X 7.83 X 0.50 X 1	=	117.14	SQ.MT
	TOTAL		=	231.13	SQ.MT
R.G. 03	ADDITION (X)				
	1	31.00 X 7.09 X 0.50 X 1	=	109.90	SQ.MT
	2	31.00 X 9.27 X 0.50 X 1	=	143.69	SQ.MT
	TOTAL		=	253.58	SQ.MT
R.G. 04	ADDITION (X)				
	1	38.78 X 9.44 X 0.50 X 1	=	183.04	SQ.MT
	2	38.78 X 8.27 X 0.50 X 1	=	160.36	SQ.MT
	3	17.40 X 3.05 X 0.50 X 1	=	26.54	SQ.MT
	TOTAL		=	369.93	SQ.MT
R.G. 05	ADDITION (X)				
	1	16.99 X 5.62 X 0.50 X 1	=	47.74	SQ.MT
	2	21.00 X 14.75 X 0.50 X 1	=	154.88	SQ.MT
	3	21.00 X 4.96 X 0.50 X 1	=	52.08	SQ.MT
	TOTAL		=	254.70	SQ.MT
R.G. 06	ADDITION (X)				
	1	19.37 X 3.14 X 0.50 X 1	=	30.41	SQ.MT
	2	19.37 X 5.76 X 0.50 X 1	=	55.79	SQ.MT
	3	30.98 X 13.72 X 0.50 X 1	=	212.52	SQ.MT
	4	30.98 X 6.60 X 0.50 X 1	=	102.23	SQ.MT
	5	25.27 X 4.31 X 0.50 X 1	=	54.46	SQ.MT
	6	23.26 X 11.72 X 0.50 X 1	=	136.30	SQ.MT
	7	28.05 X 10.29 X 0.50 X 1	=	144.32	SQ.MT
	8	28.05 X 5.53 X 0.50 X 1	=	77.56	SQ.MT
	9	6.96 X 2.38 X 0.50 X 1	=	8.28	SQ.MT
	TOTAL		=	821.87	SQ.MT
R.G. 07	ADDITION (X)				
	1	21.24 X 8.67 X 0.50 X 1	=	92.08	SQ.MT
	2	33.04 X 3.76 X 0.50 X 1	=	62.12	SQ.MT
	3	38.57 X 13.39 X 0.50 X 1	=	258.23	SQ.MT
	4	15.78 X 1.17 X 0.50 X 1	=	9.23	SQ.MT
	5	15.20 X 2.72 X 0.50 X 1	=	20.67	SQ.MT
	6	13.79 X 3.81 X 0.50 X 1	=	26.27	SQ.MT
	TOTAL		=	468.59	SQ.MT
R.G. 08	ADDITION (X)				
	1	25.19 X 4.56 X 0.50 X 1	=	57.43	SQ.MT
	2	25.19 X 5.92 X 0.50 X 1	=	74.56	SQ.MT
	3	29.73 X 13.63 X 0.50 X 1	=	202.61	SQ.MT
	4	29.73 X 24.29 X 0.50 X 1	=	361.07	SQ.MT
	5	28.07 X 4.96 X 0.50 X 1	=	69.61	SQ.MT
	6	25.85 X 10.10 X 0.50 X 1	=	130.54	SQ.MT
	7	43.14 X 6.07 X 0.50 X 1	=	130.93	SQ.MT
	8	22.07 X 4.12 X 0.50 X 1	=	45.46	SQ.MT
	9	43.14 X 4.88 X 0.50 X 1	=	105.26	SQ.MT
	10	42.46 X 4.95 X 0.50 X 1	=	105.09	SQ.MT
	11	46.39 X 15.86 X 0.50 X 1	=	367.87	SQ.MT
	TOTAL		=	1650.45	SQ.MT
R.G. 09	ADDITION (X)				
	1	14.67 X 7.33 X 0.50 X 1	=	53.77	SQ.MT
	2	14.67 X 7.03 X 0.50 X 1	=	51.57	SQ.MT
	3	24.47 X 9.97 X 0.50 X 1	=	121.98	SQ.MT
	TOTAL		=	227.31	SQ.MT
	TOTAL R.G. 01 TO 09		=	4497.82	SQ.MT

R.G AREA STATEMENT.
R.G. REQUIRED 25% (17913.56 X 0.25% = 4478.39)
TOTAL R.G. REQUIRED = 4478.39 SQ.MT.
TOTAL R.G. PROVIDED
PROVIDED R.G. ON GROUND = 4497.82 SQ.MT.
ADDITIONAL R.G. PROVIDED ON PODIUM = 4554.08 SQ.MT.

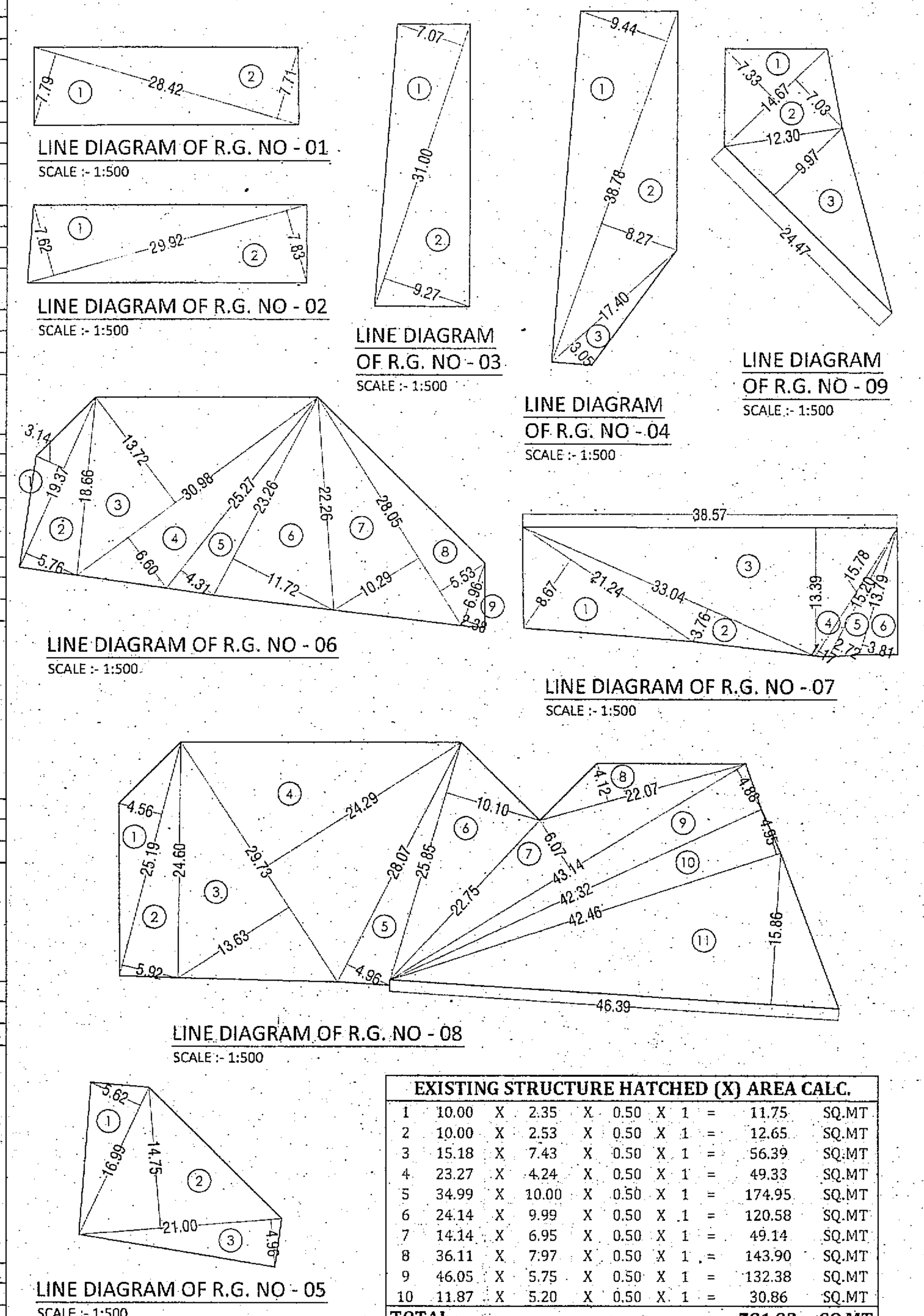

PLOT AREA CALCULATION

S.No.	Dimensions	=	Area	Unit
CRZ PLOT				
1	16.03 X 0.27 X 0.50 X 1	=	2.16	SQ.MT
2	17.03 X 5.23 X 0.50 X 1	=	44.53	SQ.MT
3	20.70 X 4.90 X 0.50 X 1	=	50.72	SQ.MT
4	40.99 X 16.59 X 0.50 X 1	=	340.01	SQ.MT
5	33.78 X 1.92 X 0.50 X 1	=	32.43	SQ.MT
6	33.78 X 1.16 X 0.50 X 1	=	19.59	SQ.MT
7	33.38 X 0.75 X 0.50 X 1	=	12.52	SQ.MT
8	32.94 X 0.59 X 0.50 X 1	=	9.72	SQ.MT
9	34.80 X 21.24 X 0.50 X 1	=	369.58	SQ.MT
10	23.66 X 9.51 X 0.50 X 1	=	112.50	SQ.MT
11	26.58 X 12.84 X 0.50 X 1	=	170.64	SQ.MT
12	27.23 X 10.26 X 0.50 X 1	=	139.69	SQ.MT
13	10.66 X 1.70 X (2 / 3) X 1	=	12.08	SQ.MT
14	27.23 X 5.22 X 0.50 X 1	=	71.07	SQ.MT
15	25.03 X 7.06 X 0.50 X 1	=	88.36	SQ.MT
TOTAL (A)		=	1475.60	SQ.MT
NON - CRZ PLOT				
16	12.12 X 5.09 X 0.50 X 1	=	30.85	SQ.MT
17	52.17 X 5.72 X 0.50 X 1	=	149.21	SQ.MT
18	41.85 X 8.42 X 0.50 X 1	=	176.19	SQ.MT
19	24.89 X 5.54 X 0.50 X 1	=	68.95	SQ.MT
20	24.89 X 6.77 X 0.50 X 1	=	84.25	SQ.MT
21	24.37 X 2.65 X 0.50 X 1	=	32.29	SQ.MT
22	45.04 X 18.19 X 0.50 X 1	=	409.64	SQ.MT
23	85.32 X 23.22 X 0.50 X 1	=	990.57	SQ.MT
24	111.11 X 37.35 X 0.50 X 1	=	2074.98	SQ.MT
25	111.11 X 29.41 X 0.50 X 1	=	1633.87	SQ.MT
26	108.12 X 20.67 X 0.50 X 1	=	1117.42	SQ.MT
27	118.08 X 45.42 X 0.50 X 1	=	2681.60	SQ.MT
28	118.08 X 38.69 X 0.50 X 1	=	2284.26	SQ.MT
29	111.39 X 77.86 X 0.50 X 1	=	4336.41	SQ.MT
30	111.13 X 26.79 X 0.50 X 1	=	1488.59	SQ.MT
31	98.42 X 24.76 X 0.50 X 1	=	1218.44	SQ.MT
32	97.50 X 4.54 X 0.50 X 1	=	221.33	SQ.MT
33	84.43 X 9.70 X 0.50 X 1	=	409.49	SQ.MT
34	52.85 X 22.91 X 0.50 X 1	=	605.40	SQ.MT
TOTAL (B)		=	20013.70	SQ.MT
PLOT (A + B)		=	21489.30	SQ.MT

EXISTING STRUCTURE HATCHED (X) AREA CALC.

S.No.	Dimensions	=	Area	Unit
1	10.00 X 2.35 X 0.50 X 1	=	11.75	SQ.MT
2	10.00 X 2.53 X 0.50 X 1	=	12.65	SQ.MT
3	15.18 X 7.43 X 0.50 X 1	=	56.39	SQ.MT
4	23.27 X 4.24 X 0.50 X 1	=	49.33	SQ.MT
5	34.99 X 10.00 X 0.50 X 1	=	174.95	SQ.MT
6	24.14 X 9.99 X 0.50 X 1	=	120.58	SQ.MT
7	14.14 X 6.95 X 0.50 X 1	=	49.14	SQ.MT
8	36.11 X 7.97 X 0.50 X 1	=	143.90	SQ.MT
9	46.05 X 5.75 X 0.50 X 1	=	132.38	SQ.MT
10	11.87 X 5.20 X 0.50 X 1	=	30.86	SQ.MT
TOTAL		=	781.93	SQ.MT

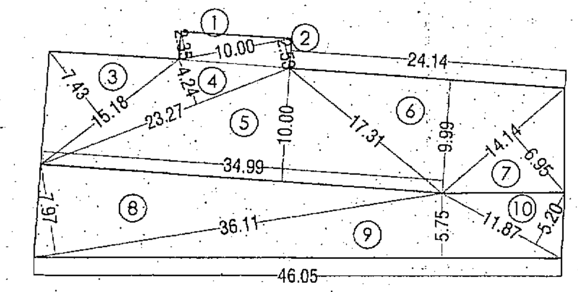

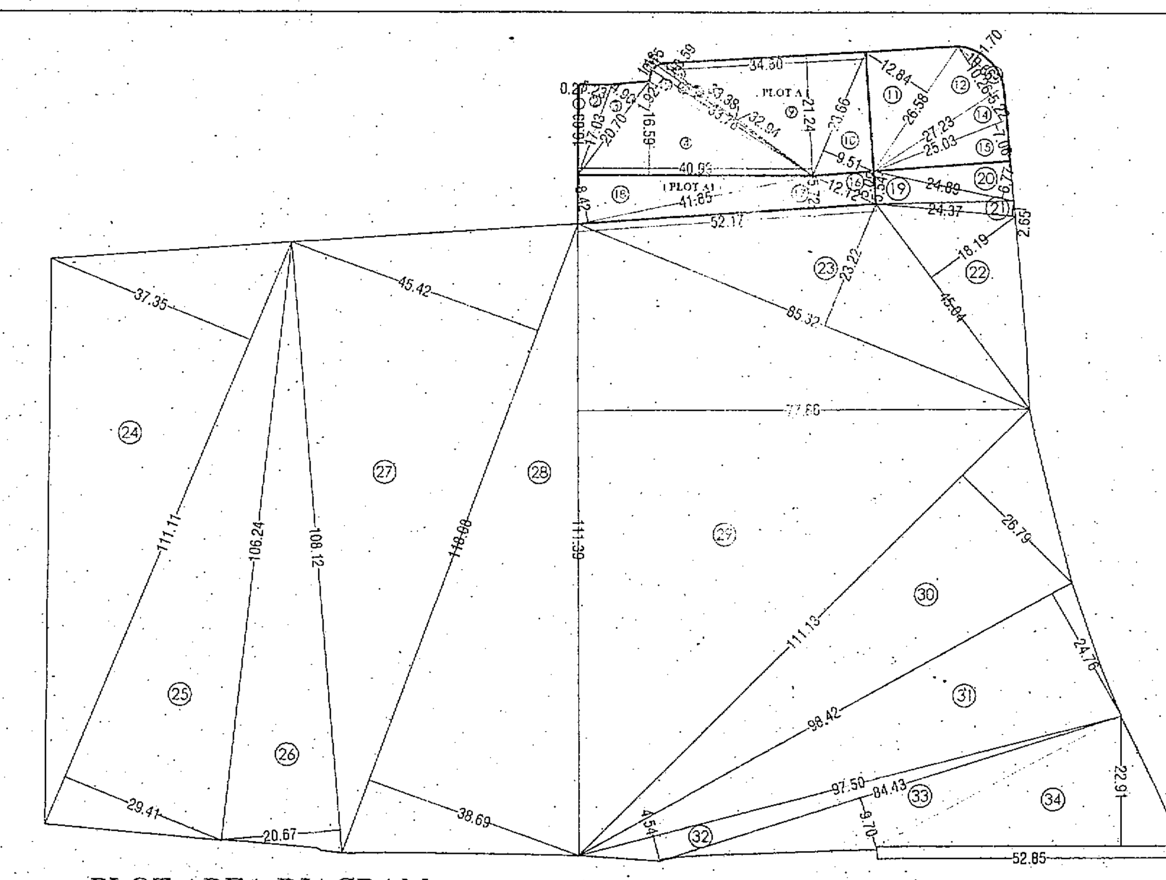

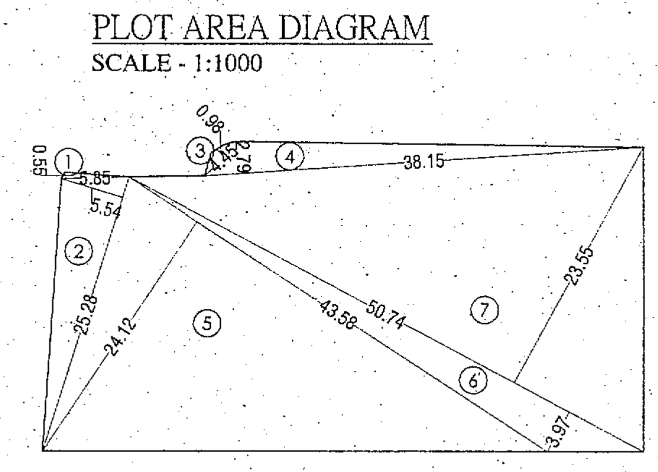

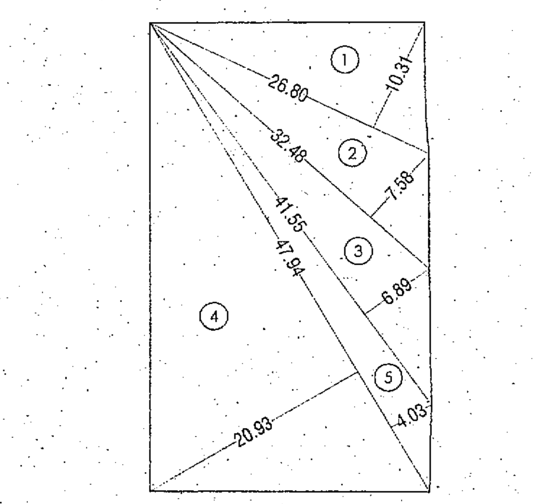

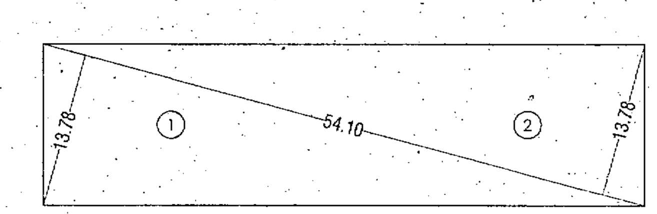

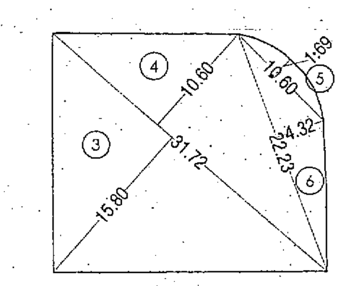

PLOT 'A' AREA CALCULATION FOR D.P. R.G. RESERVATION

S.No.	Dimensions	=	Area	Unit
1	5.85 X 0.55 X 0.50 X 1	=	1.61	SQ.MT
2	25.28 X 5.54 X 0.50 X 1	=	70.03	SQ.MT
3	4.45 X 0.98 X (2/3) X 1	=	2.91	SQ.MT
4	38.15 X 2.79 X 0.50 X 1	=	53.22	SQ.MT
5	43.58 X 24.12 X 0.50 X 1	=	525.57	SQ.MT
6	50.74 X 3.91 X 0.50 X 1	=	99.20	SQ.MT
7	50.74 X 23.55 X 0.50 X 1	=	597.46	SQ.MT
TOTAL (A)		=	1350.00	SQ.MT

PLOT 'B' AREA CALCULATION FOR M.C.G.M. PLOT (a)

S.No.	Dimensions	=	Area	Unit
1	54.10 X 13.78 X 0.50 X 1	=	372.75	SQ.MT
2	54.10 X 13.78 X 0.50 X 1	=	372.75	SQ.MT
TOTAL		=	745.50	SQ.MT
M.C.G.M. PLOT (b)				
3	31.72 X 15.80 X 0.50 X 1	=	250.59	SQ.MT
4	31.72 X 10.60 X 0.50 X 1	=	168.12	SQ.MT
5	10.60 X 1.69 X (2/3) X 1	=	11.94	SQ.MT
6	22.23 X 4.32 X 0.50 X 1	=	48.02	SQ.MT
TOTAL		=	478.66	SQ.MT
TOTAL (a + b)		=	1224.16	SQ.MT

PLOT 'C' AREA CALCULATION FOR M.H.A.D.A. PLOT

S.No.	Dimensions	=	Area	Unit
1	26.80 X 10.31 X 0.50 X 1	=	138.15	SQ.MT
2	32.48 X 7.51 X 0.50 X 1	=	121.99	SQ.MT
3	41.55 X 6.89 X 0.50 X 1	=	143.14	SQ.MT
4	47.94 X 4.03 X 0.50 X 1	=	96.60	SQ.MT
5	47.94 X 20.93 X 0.50 X 1	=	501.69	SQ.MT
TOTAL		=	1001.58	SQ.MT

AREA OF EXISTING STRUCTURE TO BE RETAINED

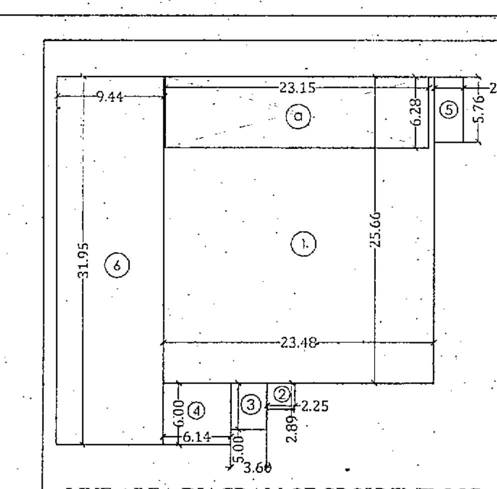

AREA CALCULATION FOR GR. FLOOR				
ADDITION (X)				
1	23.48 X 25.66 X 1.00 X 1	=	602.60	SQ.MT
2	2.25 X 2.89 X 1.00 X 1	=	6.50	SQ.MT
3	3.60 X 5.00 X 1.00 X 1	=	17.99	SQ.MT
4	6.14 X 6.00 X 1.00 X 1	=	37.19	SQ.MT
5	2.53 X 5.76 X 1.00 X 1	=	14.57	SQ.MT
TOTAL		=	678.85	SQ.MT
DEDUCTION (Y)				
a	23.15 X 6.28 X 1.00 X 1	=	145.50	SQ.MT
TOTAL		=	145.50	SQ.MT
TOTAL (A)		=	533.35	SQ.MT
ADDITION				
6	9.44 X 31.95 X 1.00 X 1	=	301.68	SQ.MT
TOTAL (B)		=	301.68	SQ.MT
1.5 TIMES AREA COUNTED IN FSI		=	452.52	SQ.MT
TOTAL AREA [A+B]		=	985.87	SQ.MT

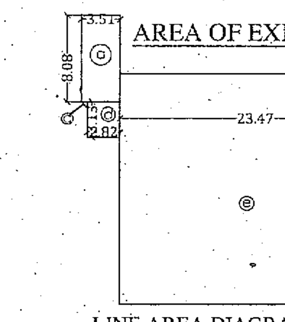

AREA CALCULATION FOR MEZZANINE FLOOR				
ADDITION				
a	3.51 X 8.08 X 1.00 X 1	=	28.35	SQ.MT
c	0.78 X 0.78 X 0.50 X 1	=	0.30	SQ.MT
d	2.82 X 3.13 X 1.00 X 1	=	8.82	SQ.MT
TOTAL (A)		=	37.47	SQ.MT
ADDITION				
e	23.47 X 20.32 X 1.00 X 1	=	476.85	SQ.MT
TOTAL(B)		=	476.85	SQ.MT
TOTAL AREA (A + B)		=	514.32	SQ.MT

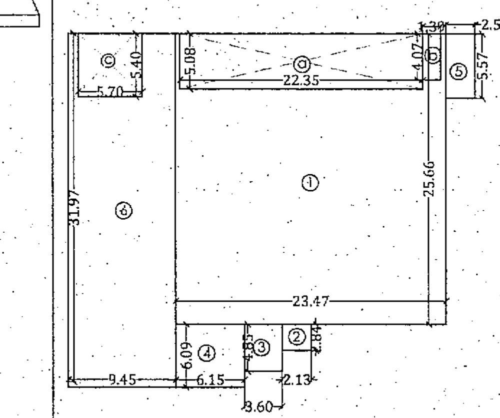

AREA CALCULATION FOR 1ST FLOOR				
ADDITION (X)				
1	23.47 X 25.66 X 1.00 X 1	=	602.32	SQ.MT
2	2.13 X 2.84 X 1.00 X 1	=	6.07	SQ.MT
3	3.60 X 4.85 X 1.00 X 1	=	17.45	SQ.MT
4	6.15 X 6.09 X 1.00 X 1	=	37.44	SQ.MT
5	2.53 X 5.57 X 1.00 X 1	=	14.08	SQ.MT
TOTAL		=	677.36	SQ.MT
DEDUCTION (Y)				
a	22.35 X 5.08 X 1.00 X 1	=	113.53	SQ.MT
b	1.39 X 4.07 X 1.00 X 1	=	5.64	SQ.MT
TOTAL		=	119.17	SQ.MT
TOTAL [A] (X - Y)		=	558.19	SQ.MT
ADDITION (X)				
6	9.45 X 31.97 X 1.00 X 1	=	302.11	SQ.MT
TOTAL		=	302.11	SQ.MT
DEDUCTION (Y)				
c	5.70 X 5.40 X 1.00 X 1	=	30.78	SQ.MT
TOTAL		=	30.78	SQ.MT
TOTAL [B] (X - Y)		=	271.33	SQ.MT
TOTAL AREA [A + B]		=	829.52	SQ.MT

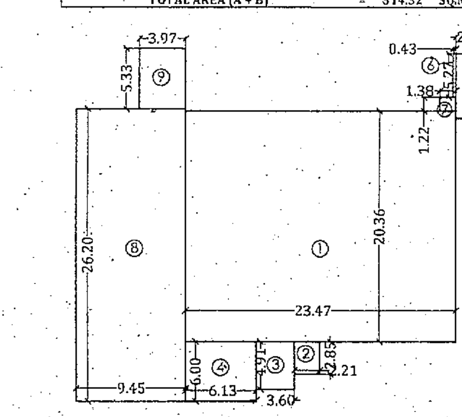

AREA CALCULATION FOR 2ND FLOOR				
ADDITION (X)				
1	23.47 X 20.36 X 1.00 X 1	=	477.85	SQ.MT
2	2.21 X 2.85 X 1.00 X 1	=	6.30	SQ.MT
3	3.60 X 4.91 X 1.00 X 1	=	17.67	SQ.MT
4	6.13 X 6.00 X 1.00 X 1	=	36.78	SQ.MT
5	2.53 X 5.72 X 1.00 X 1	=	14.47	SQ.MT
6	0.43 X 5.27 X 1.00 X 1	=	2.27	SQ.MT
7	1.38 X 1.22 X 1.00 X 1	=	1.68	SQ.MT
TOTAL [A]		=	557.02	SQ.MT
ADDITION				
8	9.45 X 26.20 X 1.00 X 1	=	247.68	SQ.MT
9	3.97 X 5.33 X 1.00 X 1	=	21.16	SQ.MT
TOTAL [B]		=	268.84	SQ.MT
TOTAL [A + B]		=	825.86	SQ.MT

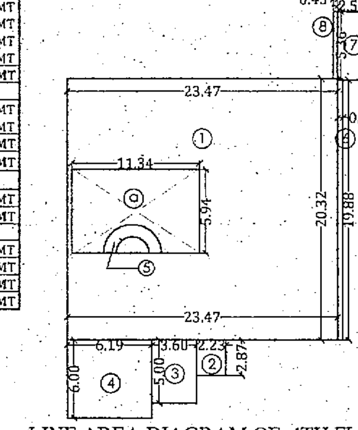

AREA CALCULATION FOR 4TH FLOOR				
ADDITION (X)				
1	23.47 X 20.32 X 1.00 X 1	=	476.85	SQ.MT
2	2.23 X 2.87 X 1.00 X 1	=	6.40	SQ.MT
3	3.60 X 5.00 X 1.00 X 1	=	18.00	SQ.MT
4	6.19 X 6.00 X 1.00 X 1	=	37.16	SQ.MT
5	area	=	6.68	SQ.MT
6	0.60 X 19.88 X 1.00 X 1	=	11.93	SQ.MT
7	2.53 X 5.79 X 1.00 X 1	=	14.65	SQ.MT
8	0.43 X 5.36 X 1.00 X 1	=	2.30	SQ.MT
TOTAL		=	573.97	SQ.MT
DEDUCTION (Y)				
a	11.34 X 5.94 X 1.00 X 1	=	67.32	SQ.MT
TOTAL		=	67.32	SQ.MT
TOTAL (X - Y)		=	506.65	SQ.MT

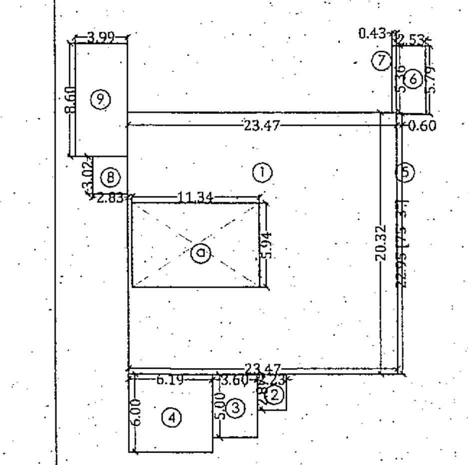

AREA CALCULATION FOR 3rd FLOOR				
ADDITION (X)				
1	23.47 X 20.32 X 1.00 X 1	=	476.85	SQ.MT
2	2.23 X 2.87 X 1.00 X 1	=	6.40	SQ.MT
3	3.60 X 5.00 X 1.00 X 1	=	18.00	SQ.MT
4	6.19 X 6.00 X 1.00 X 1	=	37.16	SQ.MT
5	0.60 X 19.88 X 1.00 X 1	=	11.93	SQ.MT
6	2.53 X 5.79 X 1.00 X 1	=	14.65	SQ.MT
7	0.43 X 5.36 X 1.00 X 1	=	2.30	SQ.MT
8	2.83 X 3.02 X 1.00 X 1	=	8.55	SQ.MT
9	3.99 X 8.60 X 1.00 X 1	=	34.31	SQ.MT
TOTAL		=	610.16	SQ.MT
LESS (Y)				
a	11.34 X 5.94 X 1.00 X 1	=	67.32	SQ.MT
TOTAL		=	67.32	SQ.MT
TOTAL (X - Y)		=	542.84	SQ.MT

EXISTING RETAINED AREA SUMMERY		
FLOOR		TOTAL AREA IN SQ.MT.
Ground FLR.	=	985.87
Mezz. FLR.	=	514.32
1ST FLR.	=	829.52
2ND FLR.	=	825.86
3rd FLR.	=	542.84
4th FLR.	=	505.65
TOTAL	=	4205.06

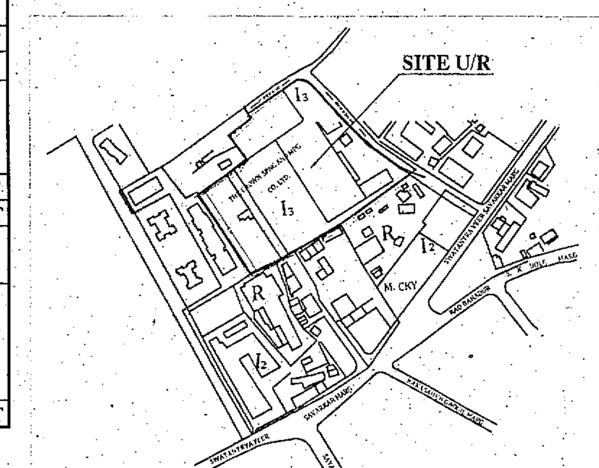

CARPET AREA SUMMERY (EWS)

S.NO.	FLOOR	AREA IN SQ.MT.
1	GROUND FLOOR	117.82
2	1ST FLOOR	337.36
3	2ND FLOOR	337.36
4	3RD FLOOR	337.36
5	4TH FLOOR	337.36
6	5TH FLOOR	337.36
7	6TH FLOOR	337.36
8	7TH FLOOR	337.36
9	8th FLOOR	296.21
10	9th FLOOR	337.36
	BUILT UP AREA	3112.91
	INCLUSIVE HOUSING 20% OF BASIC ZONAL FSI = 16429.74 X 0.85 X 1.33 X 20%	3714.76
	REQUIRED CARPET AREA (3714.76 / 1.20)	3095.64
	PROPOSED CARPET AREA	3112.91

BUILT UP AREA SUMMERY

S.NO.	FLOOR	WING - A	WING - B	WING - C
1	BASEMENT	0.00	0.00	0.00
2	GROUND FLOOR	28.90	29.67	0.00
3	1ST PARKING FLOOR	0.00	0.00	0.00
4	2nd PARKING FLOOR	480.14	0.00	0.00
5	STILT FLOOR	762.78	558.48	390.42
7	2ND FLOOR	796.08	600.94	396.56
8	3RD FLOOR	994.16	-	-
9	4TH FLOOR	994.16	-	-
10	5TH FLOOR	994.16	-	-
11	6TH FLOOR	994.16	-	-
12	7TH FLOOR	994.16	-	-
13	8TH FLOOR	994.16	-	-
14	9TH FLOOR	796.08	-	-
15	10TH FLOOR	994.16	-	-
16	11TH FLOOR	994.16	-	-
18	13TH FLOOR	994.16	-	-
19	14TH FLOOR	994.16	-	-
20	15TH FLOOR	994.16	-	-
21	16TH FLOOR	994.16	-	-
22	17TH REFUGE FLOOR	796.08	-	-
23	18TH FLOOR	994.16	-	-
24	19TH FLOOR	994.16	-	-
25	20TH FLOOR	994.16	-	-
	BUILT UP AREA	18572.46	1189.09	786.98
	TOTAL BUILT UP AREA (WING = A + B + C)			20548.53

PARKING STATEMENT (WING - A)

FLOOR	PARK REQD	NO OF FLATS	PERM PARK
BELOW 35.00 SQ.MT	1FOR 4 FLATS	0.00	0.00
35.00 TO 45.00 SQ.MT	1 FOR 2 FLATS	0.00	0.00
45.00 TO 70.00 SQ.MT	1 FOR 1 FLATS	0.00	0.00
ABOVE 70.00 SQ.MT	2 FOR 1 FLATS	69.00	138.00
TOTAL		69.00	138.00
25% FOR VISITORS PARKING			34.50
TOTAL PARKING REQUIRED		=	172.50

PARKING STATEMENT (WING - B)

FLOOR	PARK REQD	NO OF FLATS	PERM PARK
BELOW 35.00 SQ.MT	1FOR 4 FLATS	0.00	0.00
35.00 TO 45.00 SQ.MT	1 FOR 2 FLATS	0.00	0.00
45.00 TO 70.00 SQ.MT	1 FOR 1 FLATS	0.00	0.00
ABOVE 70.00 SQ.MT	2 FOR 1 FLATS	2.00	4.00
TOTAL		2.00	4.00
25% FOR VISITORS PARKING			1.00
TOTAL PARKING REQUIRED		=	5.00

PARKING STATEMENT (WING - C)

FLOOR	PARK REQD	NO OF FLATS	PERM PARK
BELOW 35.00 SQ.MT	1FOR 4 FLATS	0.00	0.00
35.00 TO 45.00 SQ.MT	1 FOR 2 FLATS	0.00	0.00
45.00 TO 70.00 SQ.MT	1 FOR 1 FLATS	0.00	0.00
ABOVE 70.00 SQ.MT	2 FOR 1 FLATS	1.00	2.00
TOTAL		1.00	2.00
25% FOR VISITORS PARKING			0.50
TOTAL PARKING REQUIRED		=	2.50

PARKING STATEMENT (EWS)

FLOOR	PARK REQD	NO OF FLATS	PERM PARK
BELOW 35.00 SQ.MT	1FOR 4 FLATS	0.00	0.00
35.00 TO 45.00 SQ.MT	1 FOR 2 FLATS	74.00	37.00
45.00 TO 70.00 SQ.MT	1 FOR 1 FLATS	0.00	0.00
ABOVE 70.00 SQ.MT	1 FOR 2 FLATS	0.00	0.00
TOTAL		74.00	37.00
25% FOR VISITORS PARKING			9.25
TOTAL PARKING REQUIRED		=	46.25

WING - A + WING - B + WING - C + EWS	
172.50 + 5.00 + 2.50 + 46.25	= 226.25 NOS
TOTAL PARKING REQUIRED SAY	= 227 NOS
TOTAL PARKING PROVIDED	= 593 NOS

PROPOSED PARKING SUMMARY

FLOORS	BIG PARKING	S.PARKING	TOTAL PARKING
BASEMENT FLOOR	140	-	140
GR. FLOOR	127	-	127
1ST PODIUM FLOOR	150	-	150
2ND PODIUM FLOOR	154	-	154
TOTAL	571.00	0.00	571.00

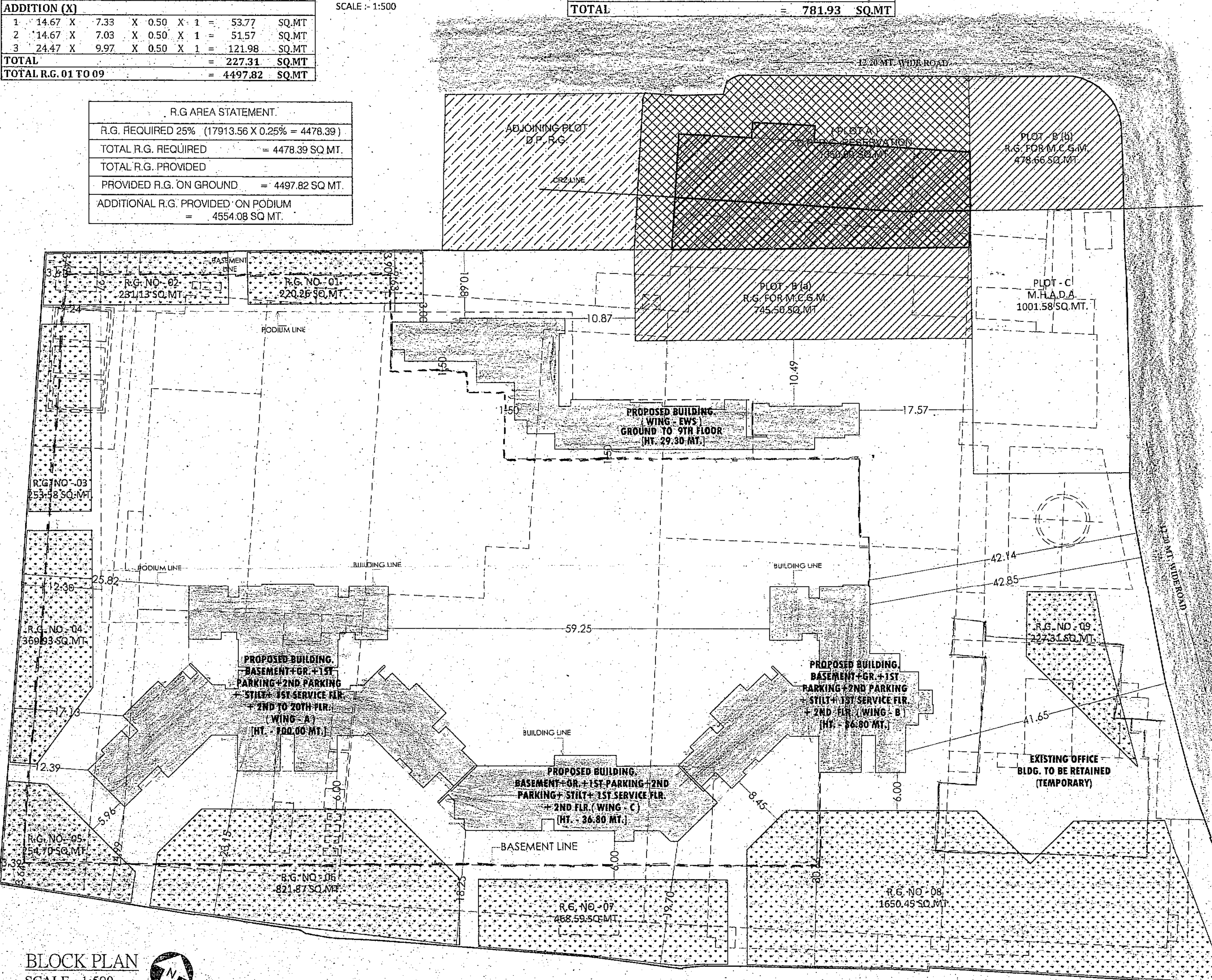

DESCRIPTION OF PROPOSAL & PROPERTY

PROPOSED LAYOUT SUBDIVISION OF PLOT BEARING F.P. NO.1211 OF T.P.S. - IV, MAHIM IN G/NORTH WARD.

NORTH	JOB. NO.	DRG. NO.	DRAWN BY
	-	01/10	-
	SCALE	DATE	CHECKED BY
	1:500	02 NOV 2015	-
REVISIONS	DESCRIPTION:		
R-0			

NAME OF THE OWNER	SIGNATURE
HOARY REALTY LTD.	

NAME AND ADDRESS OF LICENSED SURVEYOR (L.S.)	SIGNATURE
SPACEAGE CONSULTANTS, B-106, Natraj Building, Mulund Goregaon Link Road Mulund (w), Mumbai : 400 080	